Herbert Wertheim College of Engineering
UNIVERSITY of FLORIDA

Resonant MEMS
EEE 4222 / EEL 5225

Lecture 5:

- Piezoelectric Transducer: Concept & Modeling
- Electromechanical Coupling
- LEM Extraction from Measured Repsonse

Prof. Roozbeh Tabrizian
Department of Electrical and Computer Engineering
University of Florida
URL: http://phonon.ece.ufl.com; Email: rtabrizian@ufl.edu

POWERING THE NEW ENGINEER TO TRANSFORM THE FUTURE

Piezoelectric Transduction

- Discovered by Jacques and Pierre Curie in 1880
- **Piezoelectric effect**: *mechanical* force → *electric* field
  - Mechano-electrical sensing
- **Inverse piezoelectric effect**: *electric* field → *mechanical* displacement
  - Electro-mechanical actuation

Reversible

Piezoelectric effect

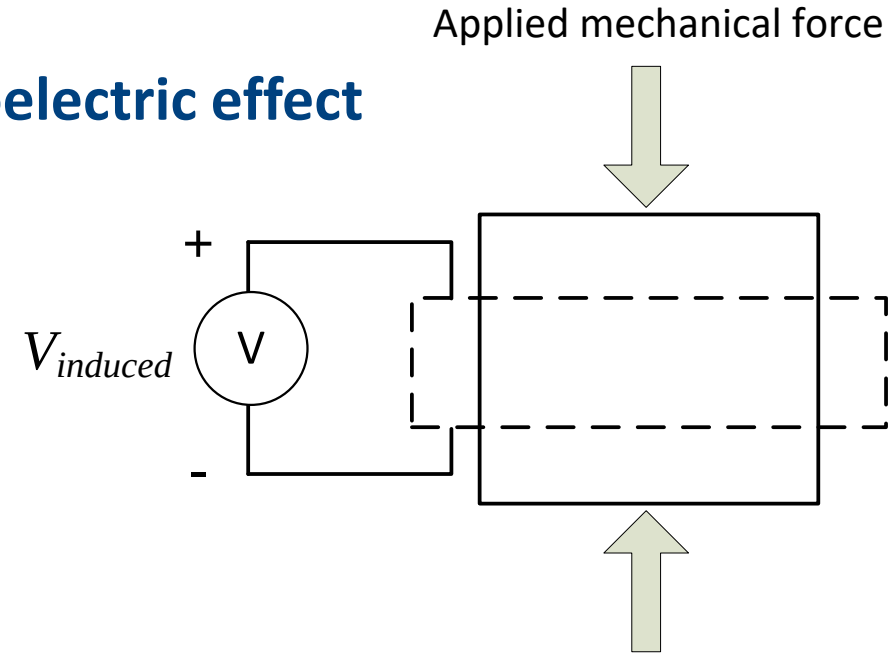

Inverse piezoelectric effect

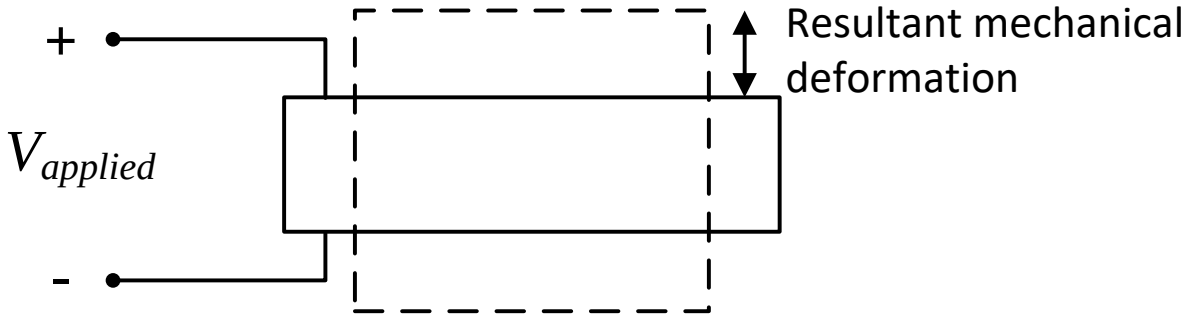

Physics behind Piezoelectric Transduction

- Molecular structures with non-zero polarization are piezoelectric
  - Application of force changes the relative distance of positive and negative poles (ions)
  - This results in excitation of electric field

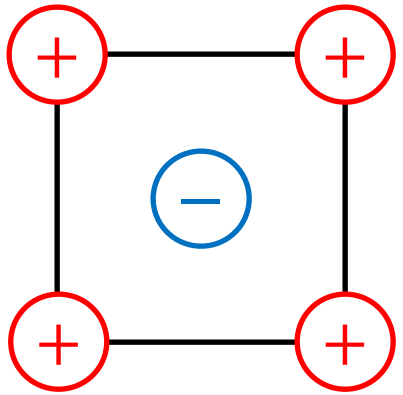

$$P = 0$$

Nonpolar

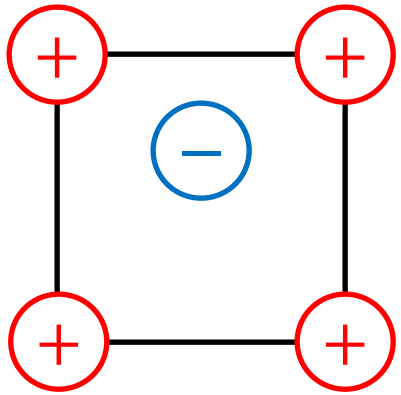

$$P = P_0$$

Polar

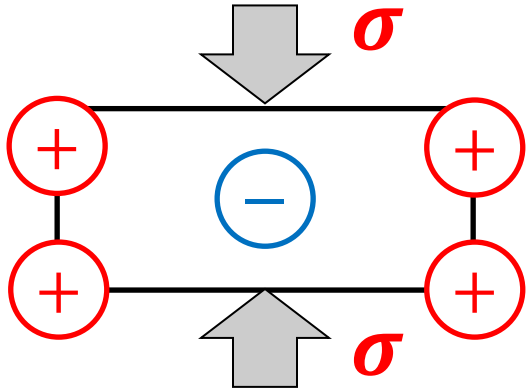

$$P = 0$$

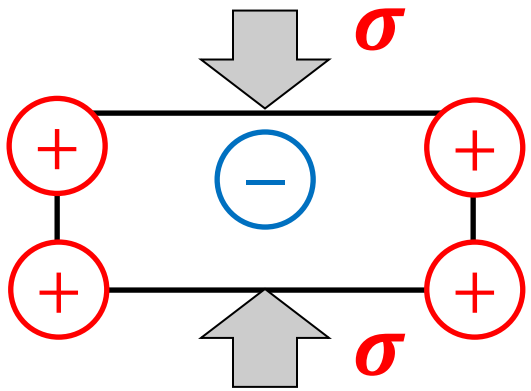

$$P = P_0 + \underbrace{d \cdot \sigma}_{= \varepsilon \cdot E}$$

Piezoelectric Materials

- ***Natural crystals*** such as quartz, lithium niobate ($LiNbO_3$), gallium arsenide (GaAs).
  - These are not available on semiconductor platforms and can not be easily integrated.
  - Especial manufacturing is required to create devices in these crystals; very challenging to make micro-scale device.
- ***Piezoelectric thin films*** can be deposited on semiconductor platforms (through a number of methods such as atomic-layer-deposition, sputtering, chemical vapor deposition (CVD), etc.) processes.
  - Examples: aluminum nitride (AlN), zinc oxide (ZnO), lead zirconate titanate (PZT).
  - These are highly desirable for MEMS resonators since films can be super-thin (sub-micron thicknesses)

Natural Quartz Crystals

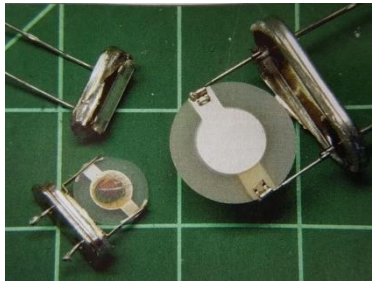

Quartz Crystals Resonator

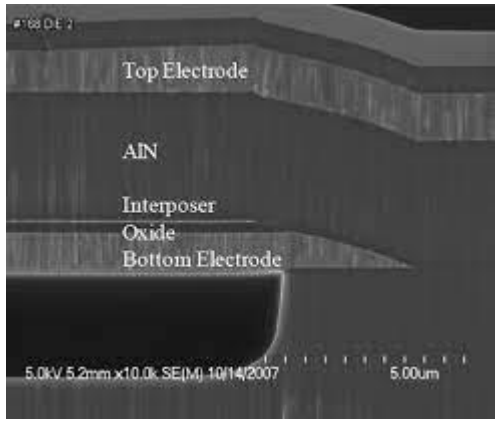

Thin-Film AlN BAW Resonator on Silicon

Piezoelectric Materials

- ***Natural crystals*** such as quartz, lithium niobate ($LiNbO_3$), gallium arsenide (GaAs).
  - These are not available on semiconductor platforms and can not be easily integrated.
  - Especial manufacturing is required to create devices in these crystals; very challenging to make micro-scale device.
- ***Piezoelectric thin films*** can be deposited on semiconductor platforms (through a number of methods such as atomic-layer-deposition, sputtering, chemical vapor deposition (CVD), etc.) processes.
  - Examples: aluminum nitride (AlN), zinc oxide (ZnO), lead zirconate titanate (PZT).
  - These are highly desirable for MEMS resonators since films can be super-thin (sub-micron thicknesses)

Natural Quartz Crystals

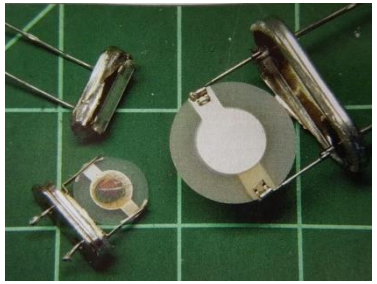

Quartz Crystals Resonator

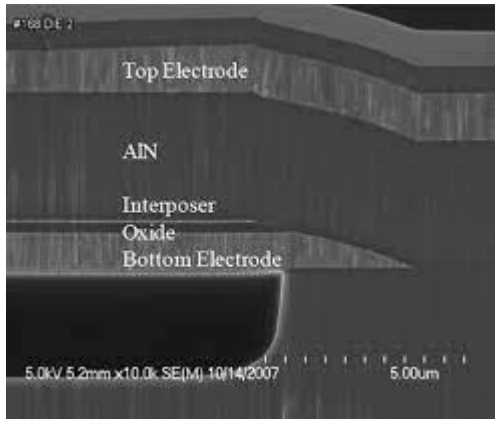

Thin-Film AlN BAW Resonator on Silicon

Piezoelectric Effect Model: Actuation Constitutive Equations

- Piezoelectric coefficients: Relating applied electric filed to volume change
  - Transverse coefficient (e_{31} / e_{32}): Relating electric field to change in width / length
  - Longitudinal coefficients (e_{33}): Relating electric field to change in thickness

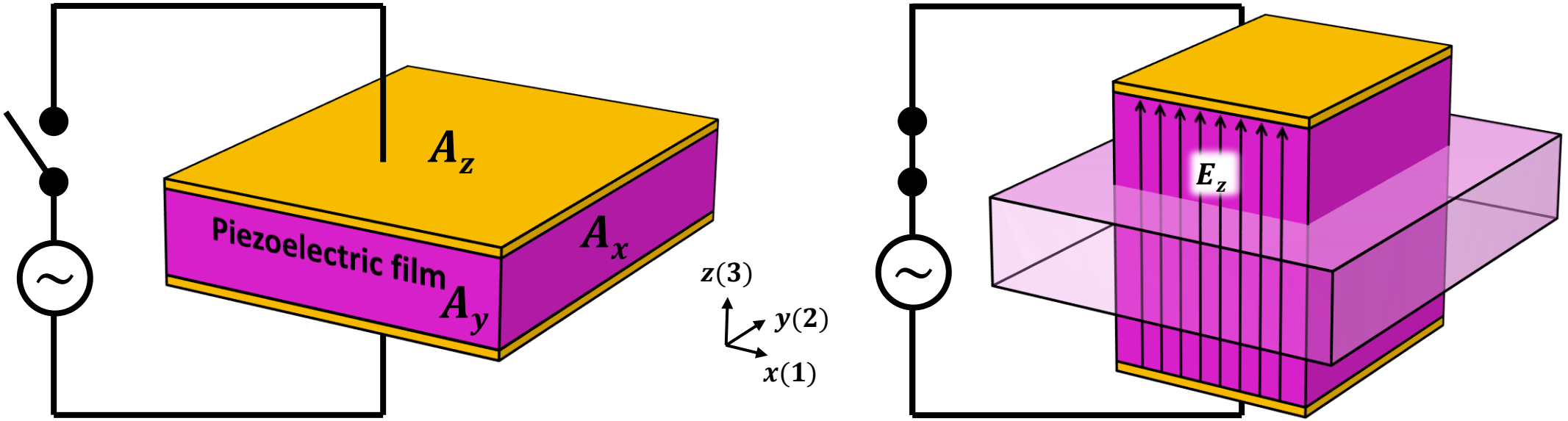

$$\frac{F_x}{A_x} = e_{31} \cdot E_z \qquad \frac{F_y}{A_y} = e_{32} \cdot E_z \qquad \frac{F_z}{A_z} = e_{33} \cdot E_z$$

Piezoelectric Effect Model: Sensing Constitutive Equations

- Piezoelectric coefficients: Relating applied electric filed to volume change
  - Transverse coefficient (e_{31} / e_{32}): Relating electric field to change in width / length
  - Longitudinal coefficients (e_{33}): Relating electric field to change in thickness

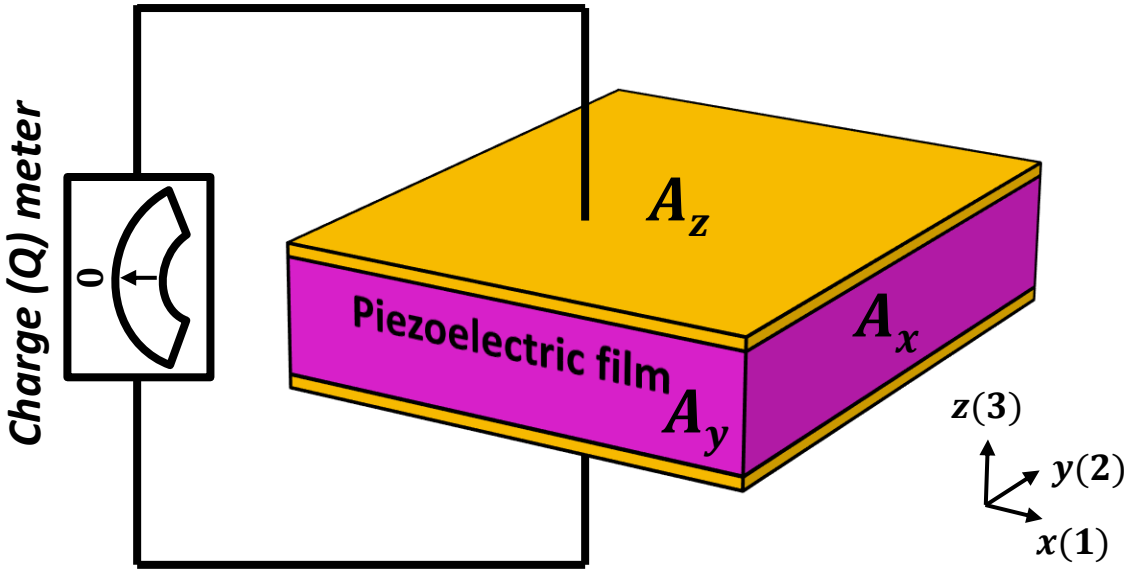

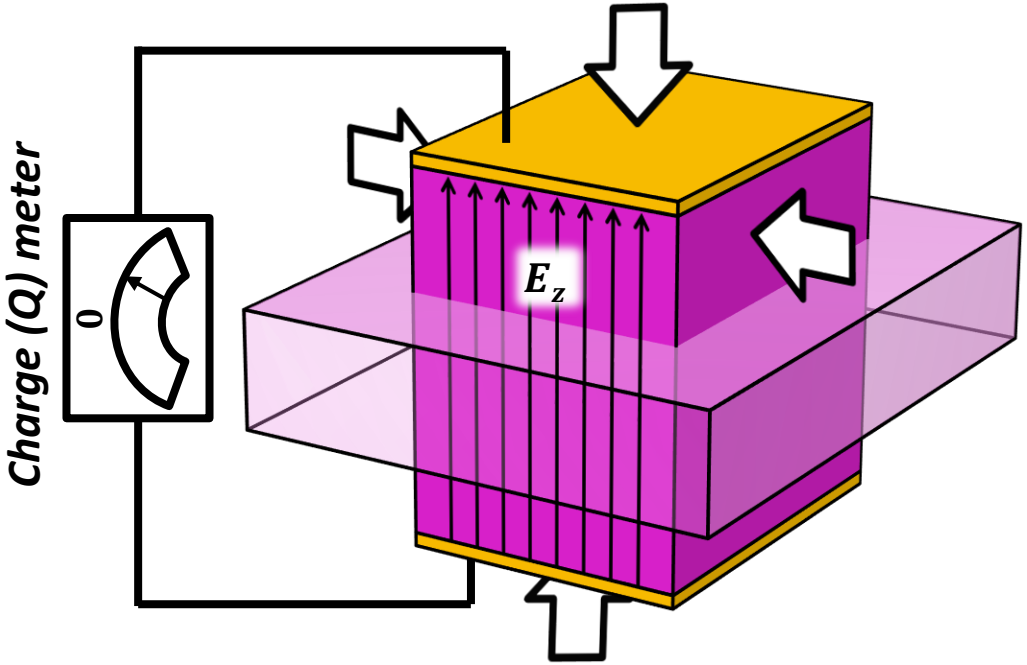

$$\frac{Q}{A_z} = e_{31} \cdot \frac{\partial Ux}{\partial x}$$

$$\frac{Q}{A_z} = e_{32} \cdot \frac{\partial U_y}{\partial y}$$

$$\frac{Q}{A_z} = e_{33} \cdot \frac{\partial U_z}{\partial z}$$

Coefficients for Common Piezoelectric Materials

- In most of Z-polar piezoelectric materials: $e_{31} = e_{32}$ and $|e_{33}| \gg |e_{31}|$.

e_{31} & e_{33} of common piezoelectric materials			Integration Method	Loss (ζ)
Material	e_{31} (C/m^2)	e_{33} (C/m^2)		
AlN	-0.605	1.5	Sputtering; MOCVD	Low
ZnO	-0.567	1.320	Sputtering	Moderate
$LiNbO_3$	0.2	1.31	No film deposition; available by bonding	Low
PZT-5H	-6.62	23.24	Sputtering; MOCVD	High

Lumped Element Modeling of Piezoelectric Transducer

- Unlike capacitive transduction, here we have distributed force
  - Distribution depends on the resonance mode-shape function
  - Also depends on the placement of the metallic electrodes to apply E
- Unlike capacitive transduction no DC bias voltage is needed

Si width-extensional resonator with capacitive transduction

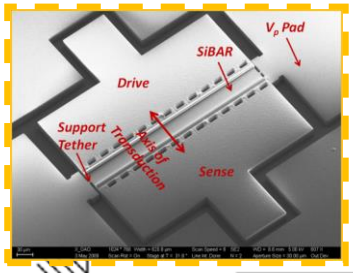

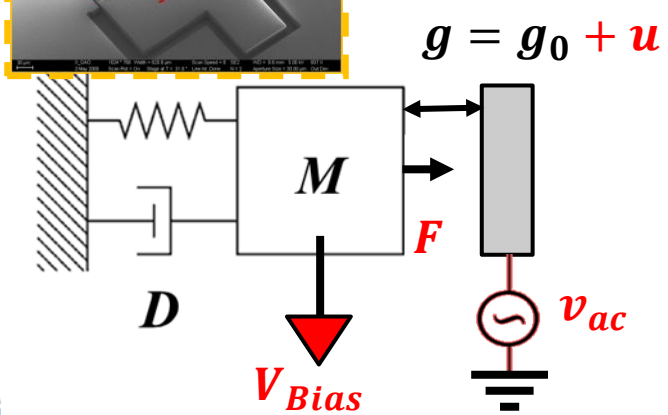

Si width-extensional resonator with transverse piezoelectric transduction

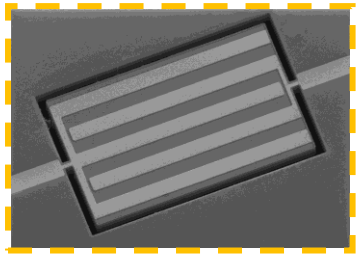

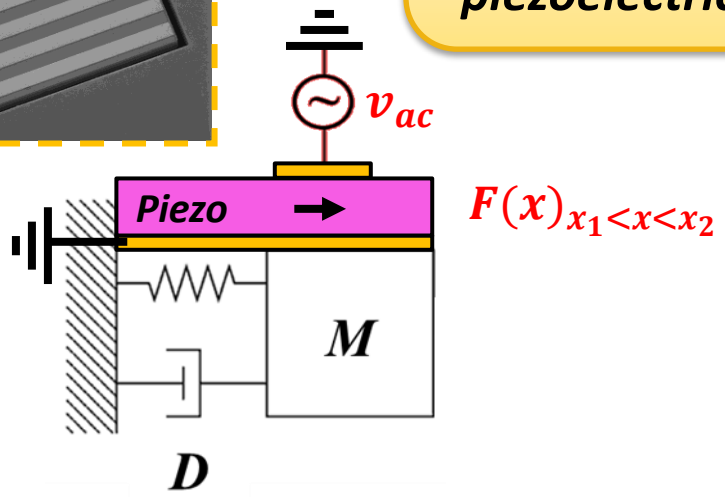

LEM of Width-Extensional Piezoelectric Resonator

- Assume the entire top & bottom surfaces of a piezoelectric bar are covered with metal electrodes and device is operating in width-extensional mode
- The piezoelectric transduction converts the vibration to electric charge
- Derive the transduction efficiency (η).

$$u(x,t) = U_0 \cdot sin(\pi \frac{x}{W}) \cdot sin(\omega_0 t)$$

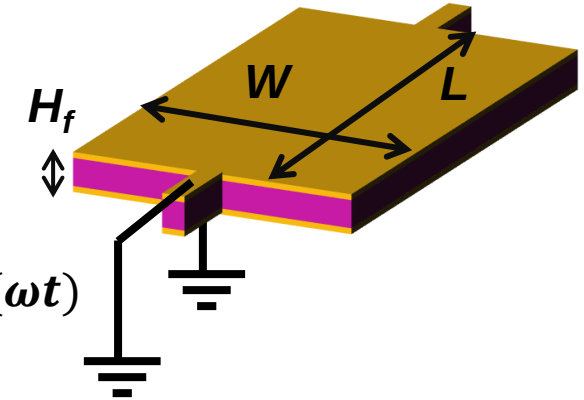

$$i_{motional} = i_0 \cdot sin(\omega t)$$

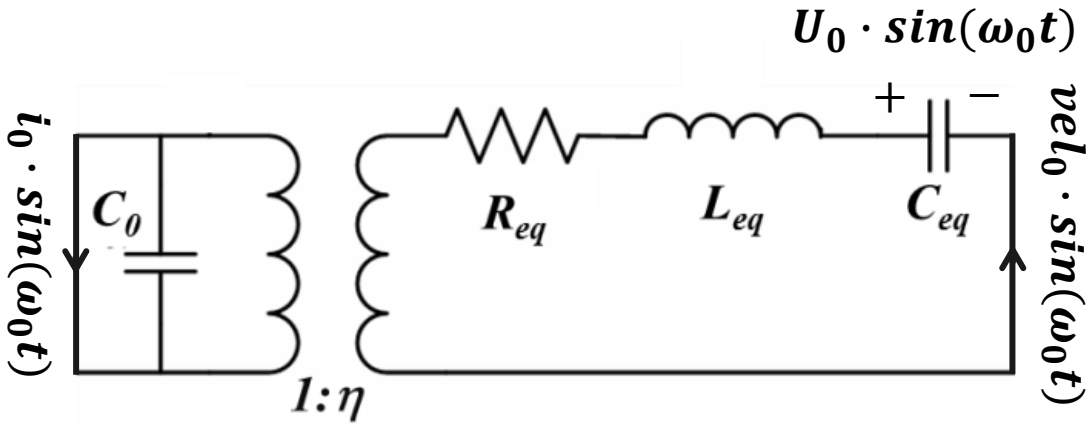

LEM of Width-Extensional Piezoelectric Resonator

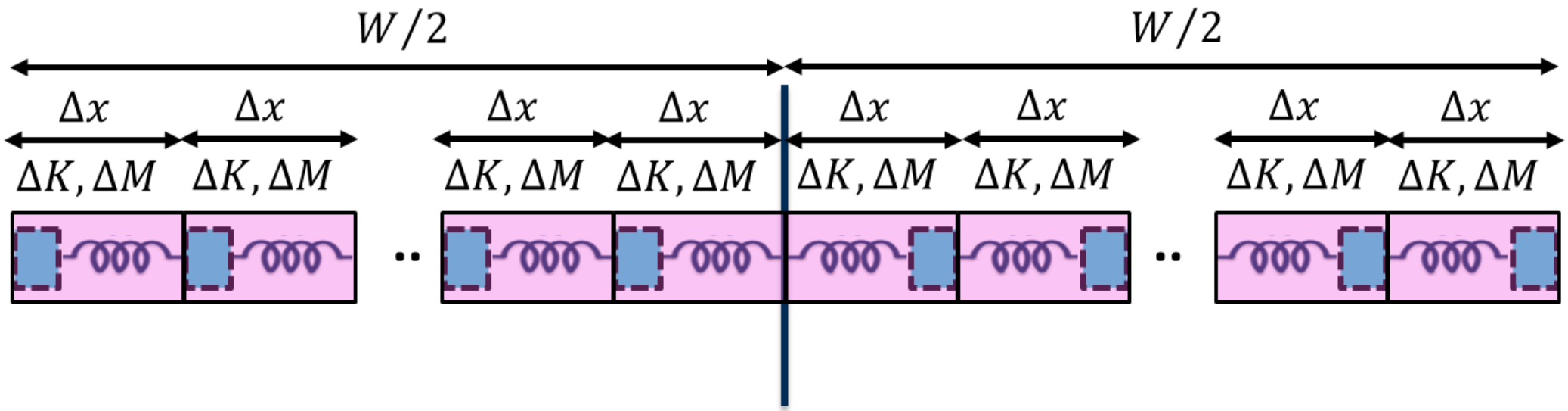

$$\frac{\Delta Q_{motional}}{\Delta A_{electrode}} = e_{31}.\frac{\partial u(x,t)}{\partial x}$$

$$\Delta Q_{motional} = e_{31} \cdot \frac{\partial u(x,t)}{\partial x} \cdot \Delta x \cdot \Delta y$$

$$\Delta i_{motional} = \Delta\left(\frac{\partial Q_{motional}}{\partial t}\right) = e_{31} \cdot \frac{\partial vel(x,t)}{\partial x} \cdot \Delta x \cdot \Delta y$$

LEM of Width-Extensional Piezoelectric Resonator

$$i_{motional} = \iint_{Electrode\ Area} \Delta i_{motional} = e_{31} \cdot L \cdot \int_{-W/2}^{W/2} \partial vel(x,t)$$

$$i_{motional} = 2e_{31} \cdot L \cdot vel_0$$

$$\boxed{\eta = \left| \frac{i_{motional}}{vel_0} \right| = 2e_{31} \cdot L}$$

LEM of Partially Electroded WE Piezoelectric Resonator

- Assume a part of top & bottom surfaces of a piezoelectric bar are covered with metal electrodes and device is operating in width-extensional mode
- The piezoelectric transduction converts the vibration to electric charge
- Derive the transduction efficiency (η).

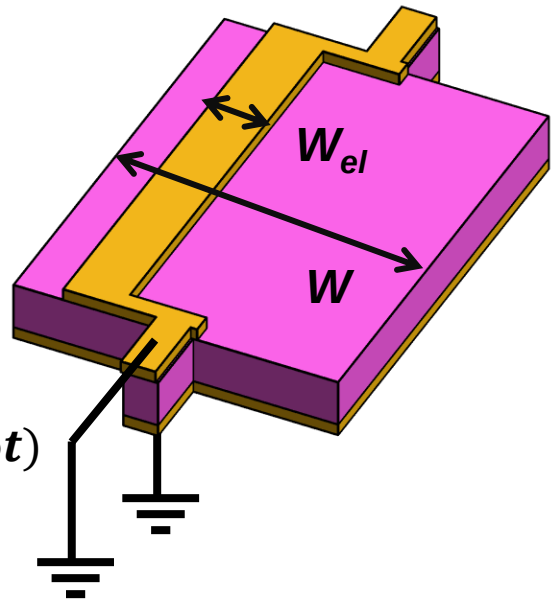

$i_{motional} = i_0 \cdot sin(\omega t)$

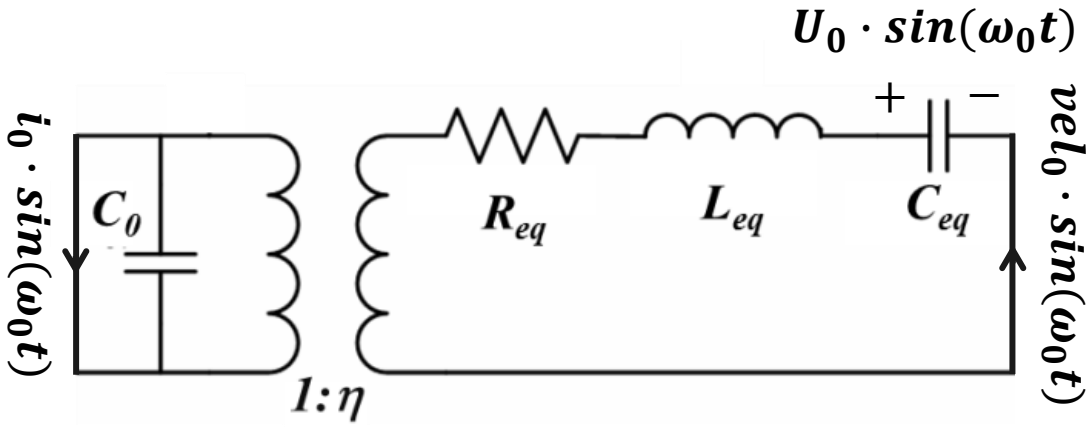

LEM of Partially Electroded WE Piezoelectric Resonator

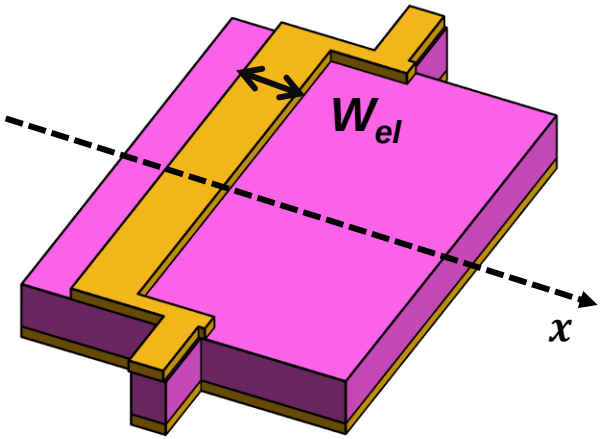

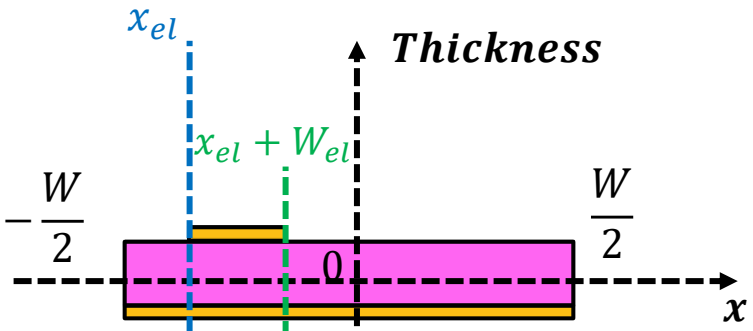

Displacement / Velocity

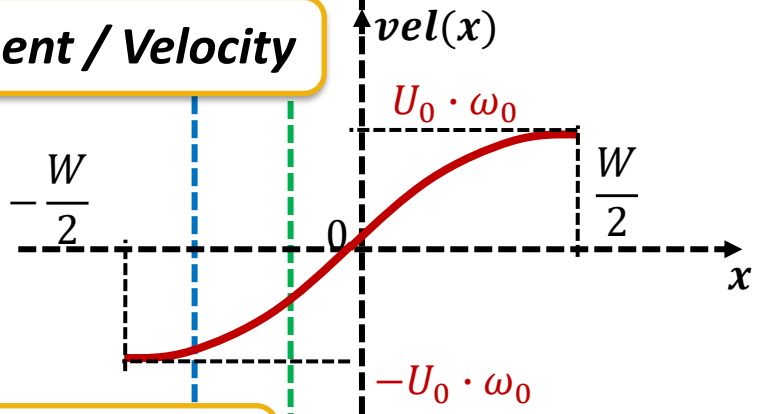

$$i_{motional} = e_{31} \cdot L \cdot \int_{x_{el}}^{x_{el}+W_{el}} \partial vel(x,t)$$

(time derivative of) Strain / Stress

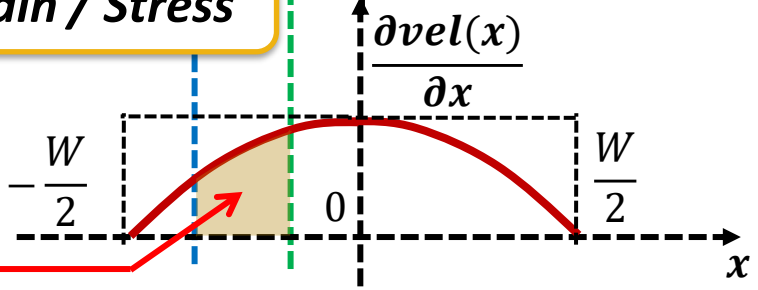

Charge / current collected by electrode

LEM of Partially Electroded WE Piezoelectric Resonator

- Take away: Best place to put electrodes is where we have larges displacement derivative (*i.e.*, large strain / stress)
- Central region is the best
- Free faces are the worst
- Same story for actuation

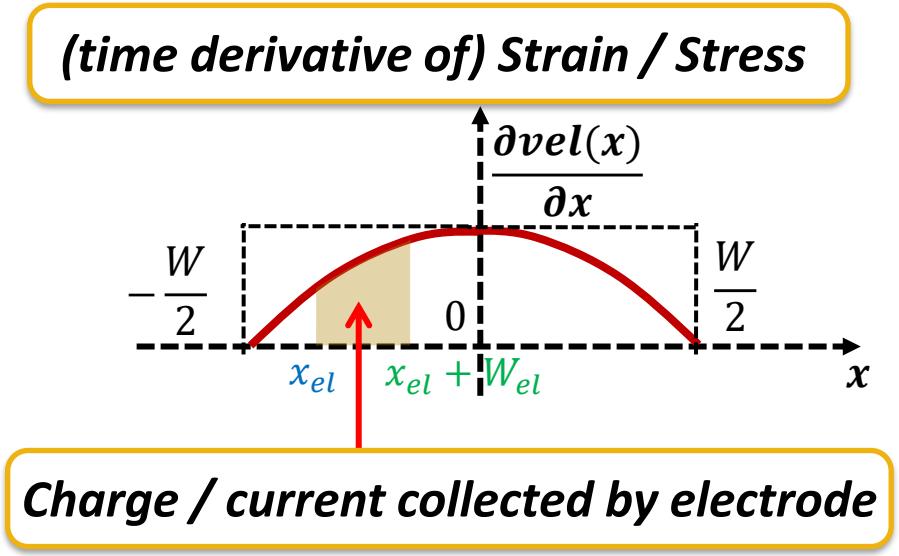

$$\eta = \left|\frac{i_{motional}}{vel(\frac{W}{2},t)}\right| = 2e_{31}\cdot L\cdot\frac{u(x_{el}+W_{el})-u(x_{el})}{2U_0}$$

Two-Port Width-Extensional Piezoelectric Resonator

- Two ports: Port 1 for actuation and Port 2 for sensing
- If electrodes are similar in dimension and placement then $\eta_1 = \eta_2$

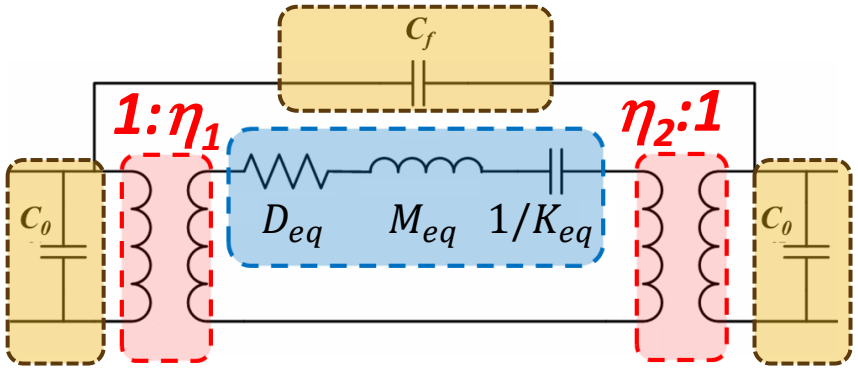

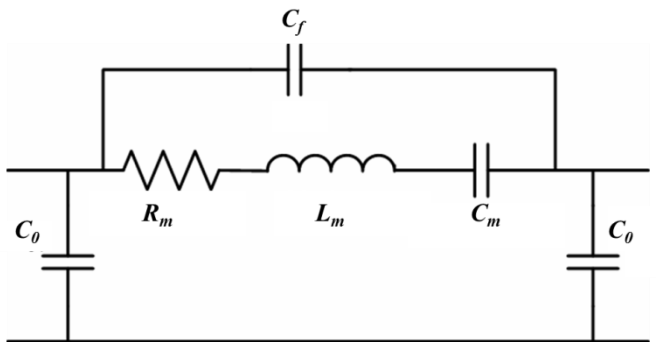

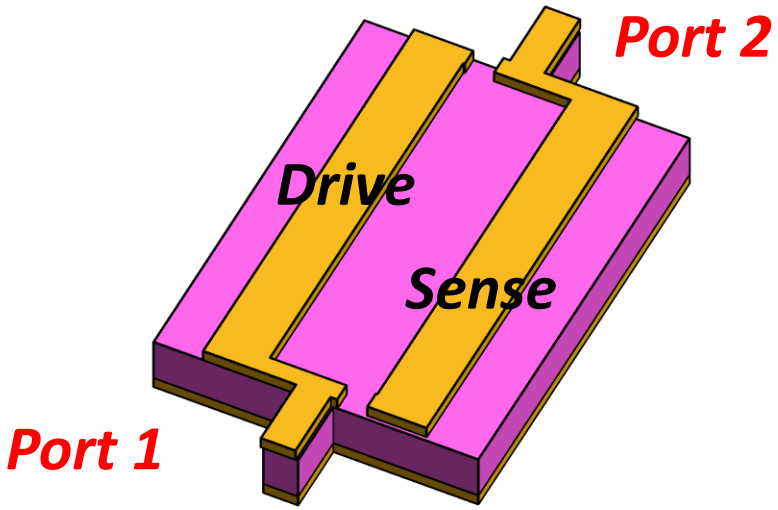

$$R_m = D_{eq} / (\eta_1 \cdot \eta_2)$$

$$L_m = M_{eq} / (\eta_1 \cdot \eta_2)$$

$$C_m = (\eta_1 \cdot \eta_2) / K_{eq}$$

Film Bulk Acoustic Wave Resonators

- First thin-film (non-quartz) piezoelectric resonator

Acoustic bulk wave composite resonators

K. M. Lakin [a] and J. S. Wang [a]
University of Southern California, Los Angeles, California 90007

(Received 6 October 1980; accepted for publication 14 November 1980)

This letter reports on a new and unique form of acoustic bulk wave resonator composed of a thin film of ZnO sputtered onto a thin Si membrane supporting structure. The piezoelectric ZnO is used to excite a longitudinal bulk wave which reflects from the free surface of the film and membrane. The structure thus forms an acoustical cavity which exhibits parallel and series electrical resonance responses at the ZnO film electrodes for both even and odd order modes. Fundamental resonant frequencies near 500 MHz have been achieved with parallel resonant Q's over 9000. The temperature coefficient of resonant frequency was found to be -31 ppm for a Si to ZnO thickness ratio of six.

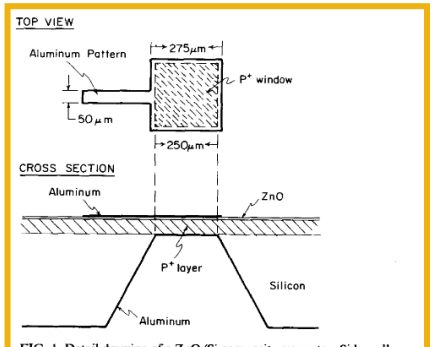

FIG. 1. Detail drawing of a ZnO/Si composite resonator. Side walls are (111) planes formed in a (110) Si wafer using selective etching.

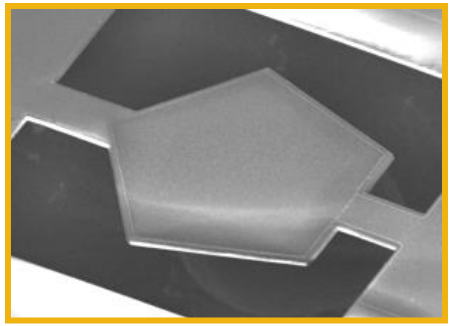

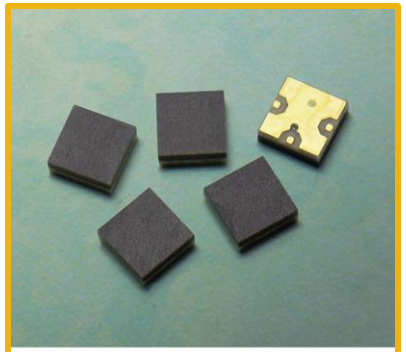

Figure 4. These miniature UMTS duplexers are fabricated with filmbulkacoustic-resonator (FBAR) technology. (Photograph courtesy of Avago Technologies.)

Film Bulk Acoustic Wave Resonators

- Thickness-extensional resonators with large e_{33} transduction
- They can be free on both sides (FBAR) or solidly mounted to the substrate through acoustic reflectors (SMR)
- Their f_0 is inversely proportional to the stack thickness
  - Constant frequency across the wafer

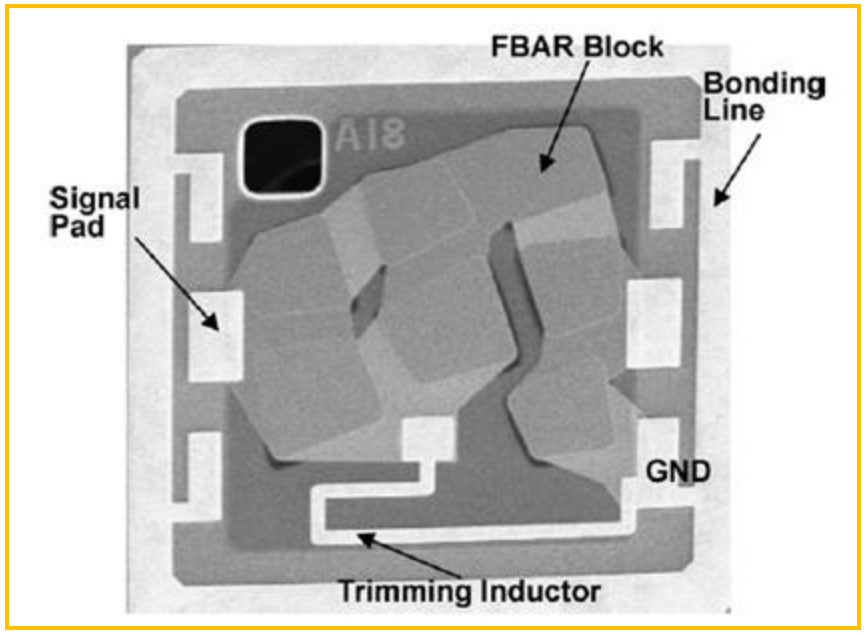

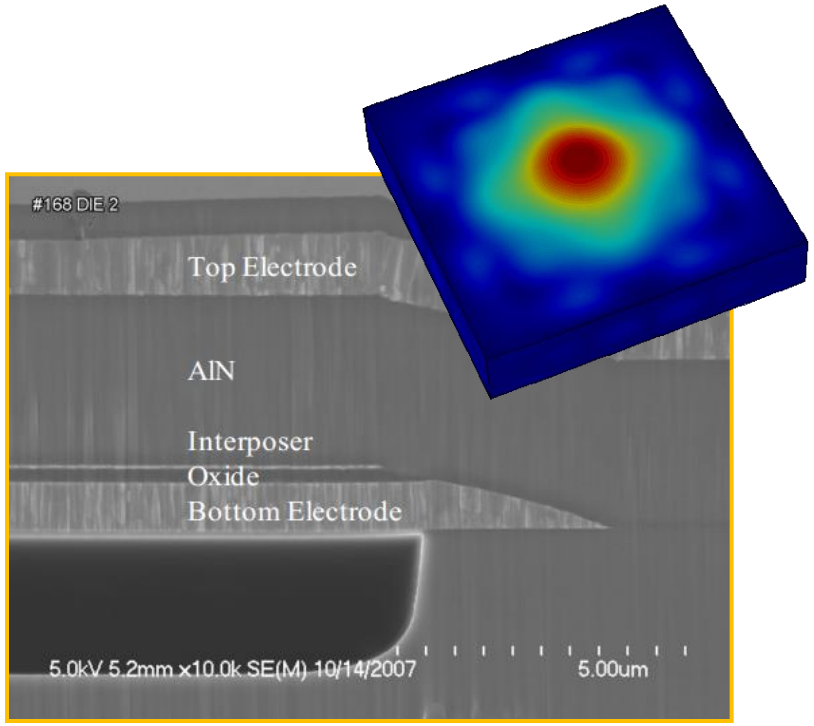

Piezoelectric Contour-Mode/Lamb-Wave Resonators

- Width/Radius extensional resonators with e_{31} transduction
- f_0 defined by in-plane dimensions and electrode pitch
- Qs are usually lower compared to FBARs

Lamb-Wave

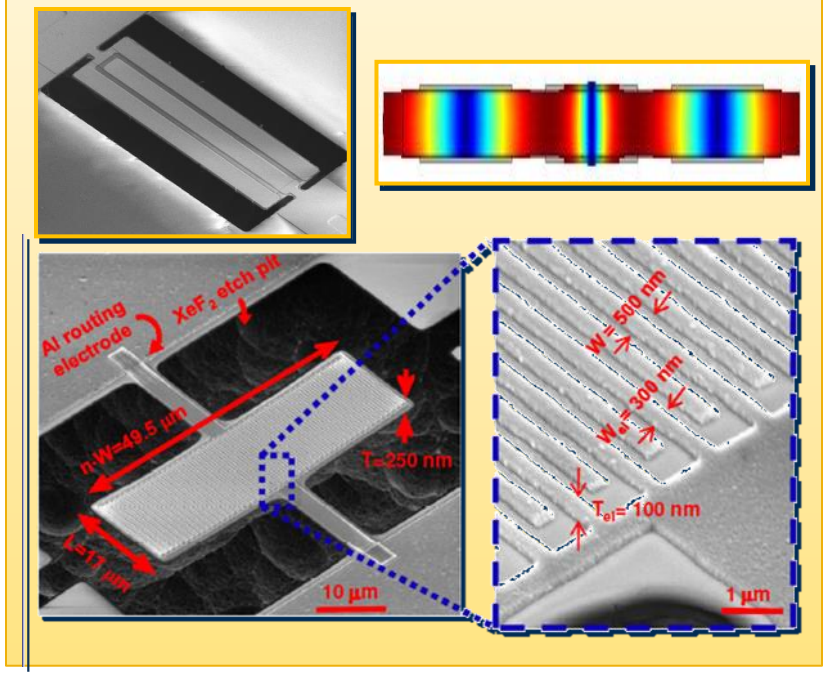

Piazza, UPenn

Contour-Mode

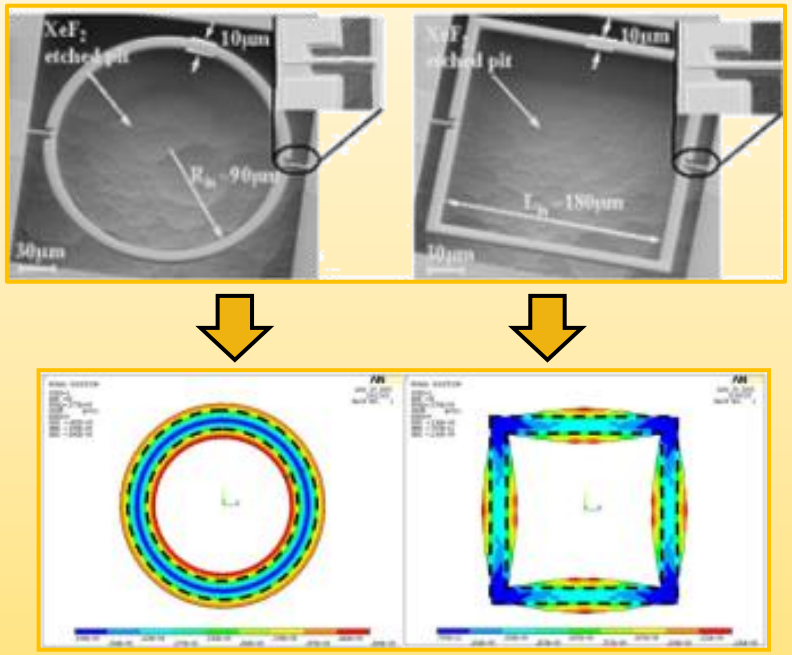

Piazza, UPenn

Piezoelectric-on-Semiconductor Resonators

- Single-crystal Si / Ge layer addition improves *Q* & power handling
- Semiconductor layer is not electromechanically active and loads the electromechanical coupling of the piezoelectric film
- This increases K_{eq}, M_{eq} and D_{eq}, while η remains the same.

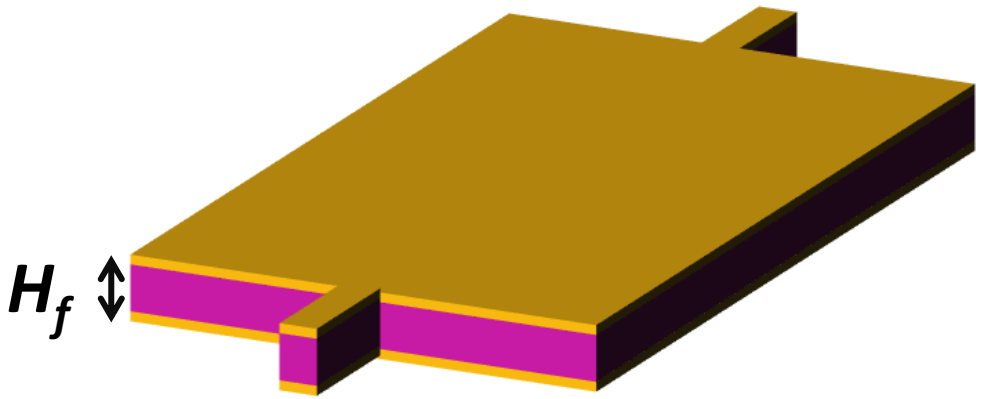

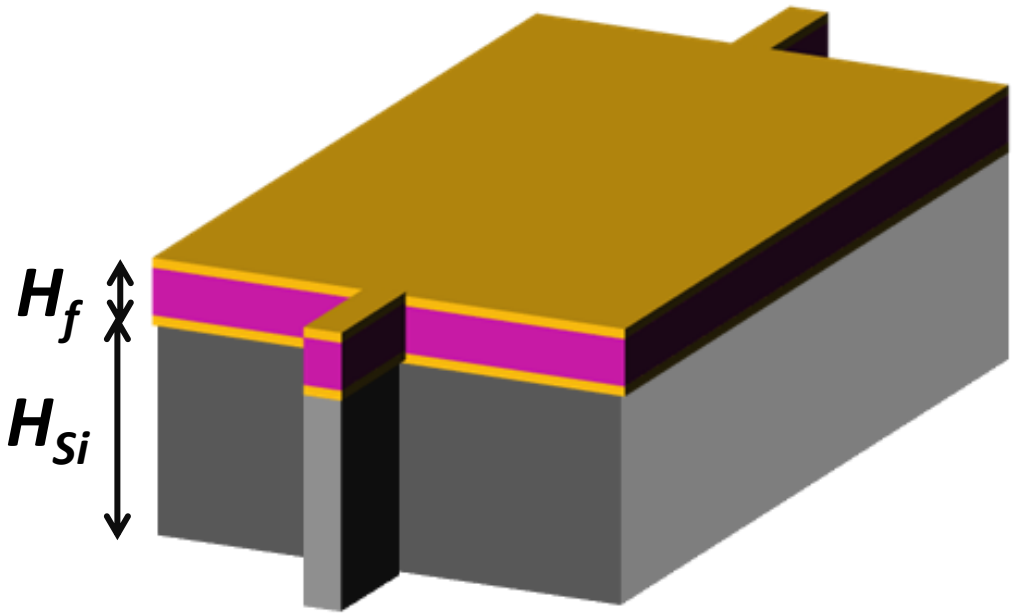

LEM of Piezoelectric-on-Semiconductor Resonators

- The mechanical equivalent circuit should be driven to capture the effect of Si

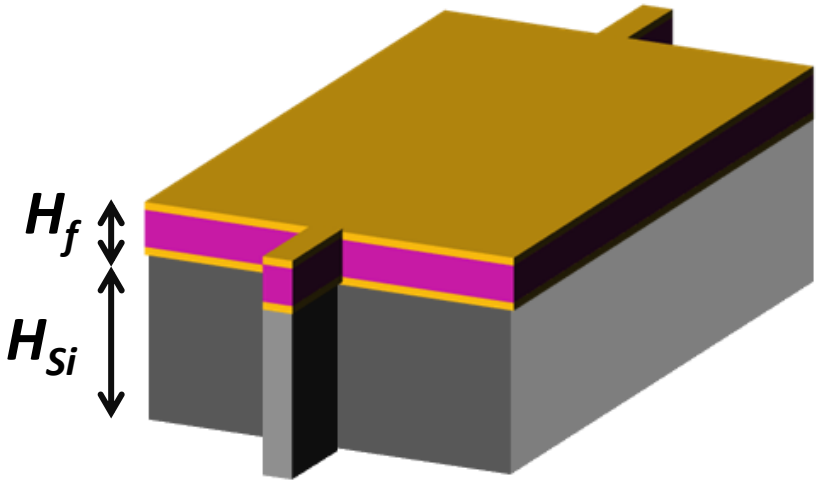

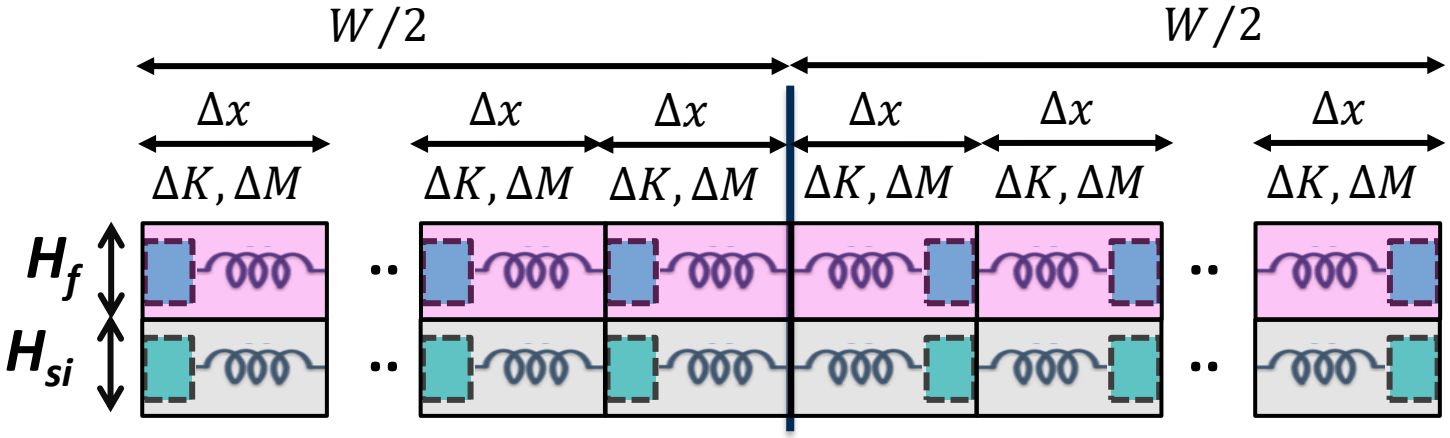

$$\Delta M = \rho_f \cdot \Delta Volume_f + \rho_{Si} \cdot \Delta Volume_{Si} = \left(\rho_f H_f + \rho_{Si} H_{Si}\right) \cdot L \cdot \Delta x$$

$$\Delta K = \frac{E_f \cdot A_f}{\Delta x} + \frac{E_{Si} \cdot A_{Si}}{\Delta x} = \frac{\left(E_f H_f + E_{Si} H_{Si}\right) \cdot L}{\Delta x}$$

LEM of Piezoelectric-on-Semiconductor Resonators

- The mechanical equivalent circuit should be driven to capture the effect of Si

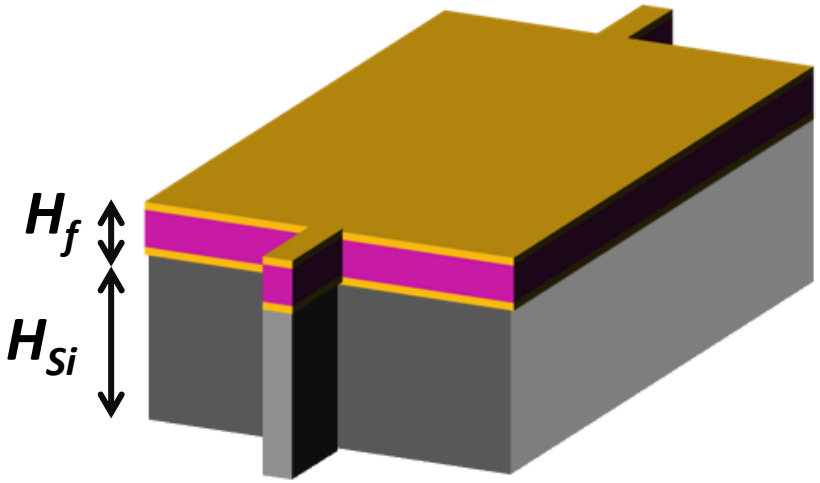

$$M_{eq} = \frac{(\rho_f H_f + \rho_{Si} H_{Si}) \cdot L \cdot W}{2} = \frac{M_f + M_{Si}}{2}$$

$$K_{eq} = \frac{(E_f H_f + E_{Si} H_{Si}) \cdot L \cdot \pi^2}{2W}$$

$$f_0 = \frac{1}{2\pi}\sqrt{\frac{K_{eq}}{M_{eq}}} = \frac{1}{2W}\sqrt{\frac{E_f H_f + E_{Si} H_{Si}}{\rho_f H_f + \rho_{Si} H_{Si}}}$$

Q of Piezoelectric-on-Semiconductor Resonators

- Q (and D_{eq}) of the piezoelectric-on-semiconductor resonator can be calculated from Q_{Si} and Q_f.

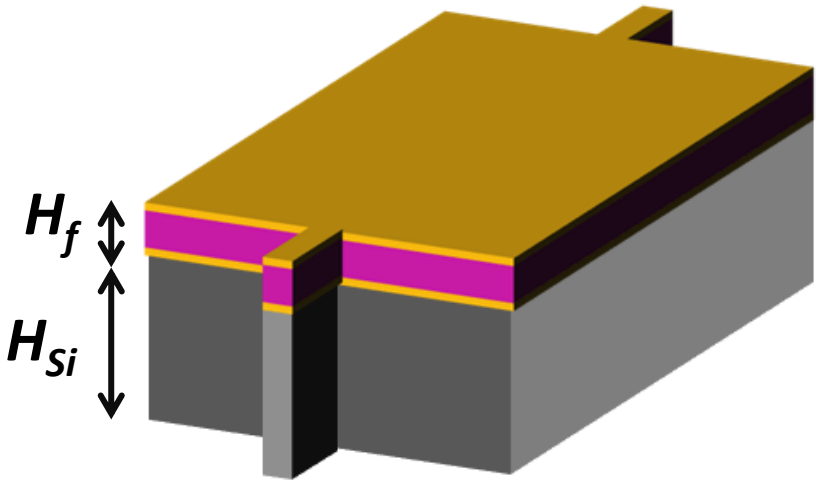

$$\frac{1}{Q} = \frac{1}{2\pi}\frac{\hat{E}_{Dissipated\ per\ cycle}}{\hat{E}_{Stored}}$$

$$\frac{1}{Q} = \frac{1}{2\pi}\frac{\hat{E}_{D,f} + \hat{E}_{D,Si}}{\hat{E}_S} = \frac{1}{2\pi}\left(\frac{\hat{E}_{D,f}}{\hat{E}_S} + \frac{\hat{E}_{D,Si}}{\hat{E}_S}\right)$$

$$Q_f = 2\pi\frac{\hat{E}_{S,f}}{\hat{E}_{D,f}} = 2\pi\frac{E_f H_f}{E_f H_f + E_{Si} H_{Si}}\frac{\hat{E}_S}{\hat{E}_{D,f}}$$

$$Q_{Si} = 2\pi\frac{\hat{E}_{S,Si}}{\hat{E}_{D,Si}} = 2\pi\frac{E_{Si} H_{Si}}{E_f H_f + E_{Si} H_{Si}}\frac{\hat{E}_S}{\hat{E}_{D,Si}}$$

$$\boxed{\frac{1}{Q} = \frac{E_f H_f}{E_f H_f + E_{Si} H_{Si}}\cdot\frac{1}{Q_f} + \frac{E_{Si} H_{Si}}{E_f H_f + E_{Si} H_{Si}}\cdot\frac{1}{Q_{Si}}}$$

Piezo vs Piezo-on-Semiconductor: Transfer-Function Comparison

- Higher Q of piezo-on-Si results in sharper peak of transfer-function
- The piezo-on-Si has a higher R_m & insertion loss (mag of transfer-func. at f_{res})
  - $R_{m,piezo} = \frac{D_f}{\eta_1 \eta_2} < R_{m,piezo-on-Si} = \frac{D_f + D_{Si}}{\eta_1 \eta_2}$

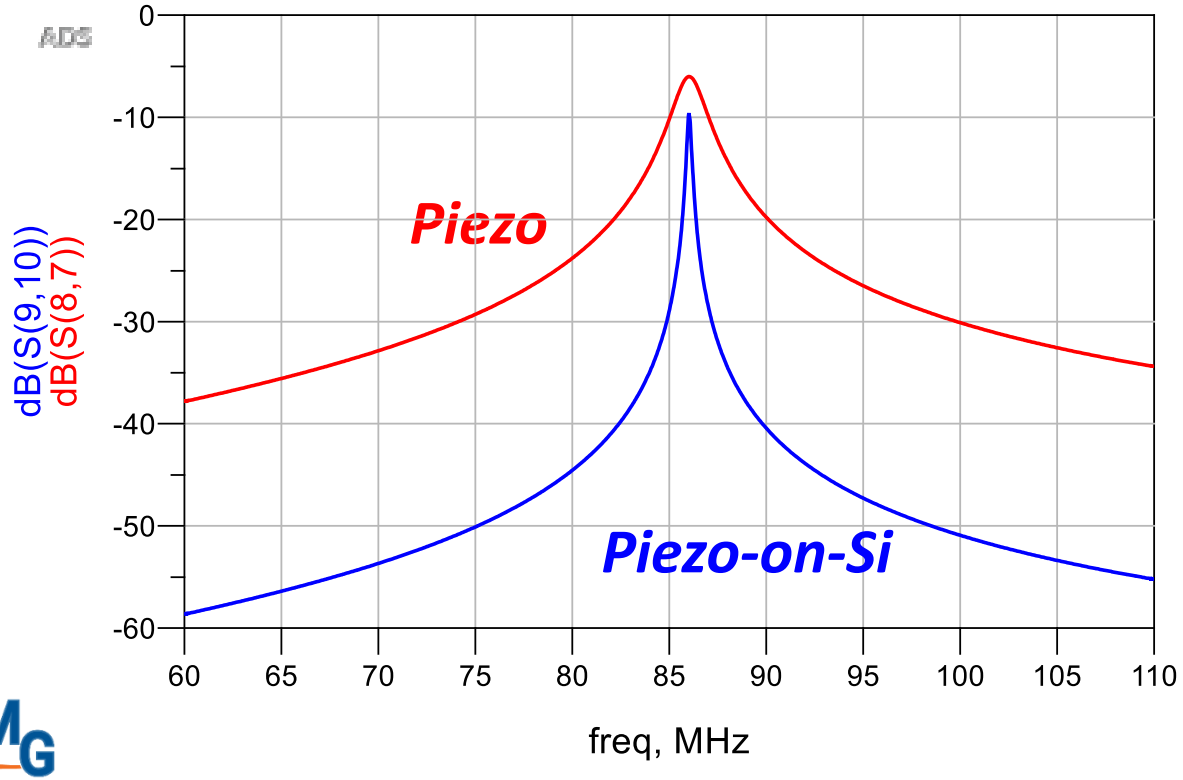

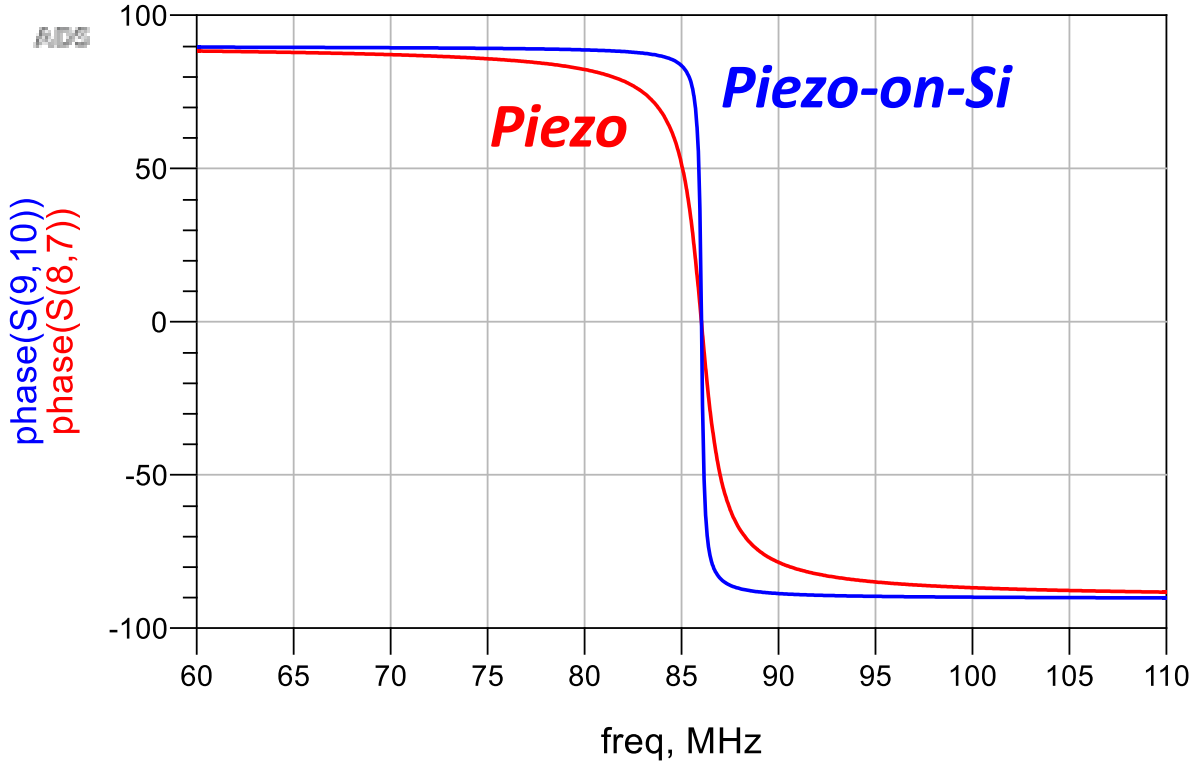

Electromechanical Coupling in Piezo-Transduced MEMS Resonators

- A metric comparing the energy distribution in transducer vs input energy

$$\hat{E}_{input} = \hat{E}_{elec\ parasitic} + \hat{E}_{mechanical} + \hat{E}_{dissipated} = \hat{E}_{elec\ parastici} + \hat{E}_{mech,f} + \hat{E}_{mech,Si} + \hat{E}_{dissipated}$$

- Among different energy parts, only $\hat{E}_{mech,f}$ is delivered to the output at f_{res}!
  - The energy path from input to output is ultimately through transducer.
- The effectiveness of power delivery from input to output is quantified by electromechanical coupling coefficient.

$$k_t^2 \triangleq \frac{\hat{E}_{mech,f}}{\hat{E}_{mech,f} + \hat{E}_{elec\ parasitic}}$$

Electromechanical Coupling Coefficient of Transducer

k_t^2 vs Fundamental Piezoelectric Material Properties

- For a fully electroded one-port resonator, k_t^2 only depends on basic material properties of piezoelectric film.

$$k_t^2 = \frac{\hat{E}_{mech,f}}{\hat{E}_{mech,f} + \hat{E}_{elec\ parasitic}} = \frac{\frac{1}{2}\frac{F^2}{K_{eq}}}{\frac{1}{2}\frac{F^2}{K_{eq}} + \frac{1}{2}Cv_0^2}$$

$$\Rightarrow k_t^2 = \frac{\frac{1}{2}\frac{2W}{E_f LH\pi^2}(\eta v_0)^2}{\frac{1}{2}\frac{2W}{E_f LH\pi^2}(\eta v_0)^2 + \frac{1}{2}Cv_0^2} = \frac{\frac{8We_{ij}^2L^2}{E_f LH\pi^2}}{\frac{8We_{ij}^2L^2}{E_f LH\pi^2} + \frac{\varepsilon_r\varepsilon_0 WL}{H}}$$

$$\boxed{k_t^2 = \frac{\frac{8}{\pi^2}e_{ij}^2}{\frac{8}{\pi^2}e_{ij}^2 + E_f\varepsilon_r\varepsilon_0}}$$

k_t^2 in Piezo-on-Semiconductor Resonator

- k_t^2 is loaded by the mechanical energy stored in Si layer.

$$k_t^2 = \frac{\hat{E}_{mech,f}}{\hat{E}_{mech,f} + \hat{E}_{elec\ parasitic} + \hat{E}_{mech,Si}} = \frac{\frac{1}{2}\frac{F^2}{K_{eq}}\frac{E_f H_f}{E_f H_f + E_{Si} H_{Si}}}{\frac{1}{2}\frac{F^2}{K_{eq}} + \frac{1}{2} C v_0^2}$$

$$\Rightarrow k_t^2 = \frac{\frac{1}{2}\frac{2W}{(E_f H_f + E_{Si} H_{Si}) L\pi^2}(\eta v_0)^2 \frac{E_f H_f}{E_f H_f + E_f H_f}}{\frac{1}{2}\frac{2W}{(E_f H_f + E_{Si} H_{Si}) L\pi^2}(\eta v_0)^2 + \frac{1}{2} C v_0^2} = \frac{\frac{8W e_{ij}^2 L^2}{(E_f H_f + E_{Si} H_{Si}) L\pi^2}\frac{E_f H_f}{E_f H_f + E_{Si} H_{Si}}}{\frac{8W e_{ij}^2 L^2}{(E_f H_f + E_{Si} H_{Si}) L\pi^2} + \frac{\varepsilon_r \varepsilon_0 W L}{H_f}}$$

$$\boxed{k_t^2 = \frac{E_f H_f}{E_f H_f + E_{Si} H_{Si}} \frac{\frac{8}{\pi^2} e_{ij}^2}{\frac{8}{\pi^2} e_{ij}^2 + \frac{E_f H_f + E_{Si} H_{Si}}{H_f} \varepsilon_r \varepsilon_0}}$$

k_t^2 in Capacitively Transduced Resonators

- A similar formulation can be used to calculate k_t^2 for capacitive resonator created in pure semiconductor (although it is not common).

$$k_t^2 = \frac{\hat{E}_{mech}}{\hat{E}_{mech} + \hat{E}_{elec\ parasitic}} = \frac{\frac{1}{2}\frac{F^2}{K_{eq}}}{\frac{1}{2}\frac{F^2}{K_{eq}} + \frac{1}{2}Cv_0^2}$$

$$\Rightarrow k_t^2 = \frac{\frac{1}{2}\frac{2W}{ELH\pi^2}(\eta v_0)^2}{\frac{1}{2}\frac{2W}{ELH\pi^2}(\eta v_0)^2 + \frac{1}{2}Cv_0^2} = \frac{\frac{2W}{ELH\pi^2}\left(\frac{\varepsilon_0 LHV_{Bias}}{g_0^2}\right)^2}{\frac{2W}{ELH\pi^2}\left(\frac{\varepsilon_0 LHV_{Bias}}{g_0^2}\right)^2 + \frac{\varepsilon_0 LH}{g_0^2}}$$

$$k_t^2 = \frac{\frac{2W}{E\pi^2}\frac{\varepsilon_0 V_{Bias}^2}{g_0^2}}{\frac{2W}{E\pi^2}\frac{\varepsilon_0 V_{Bias}^2}{g_0^2} + 1} \approx \frac{2W}{E\pi^2}\frac{\varepsilon_0 V_{Bias}^2}{g_0^2}$$

- Note the dependence of k_t^2 in capacitive resonators on frequency defining dimension (*i.e.*, W).
- This means higher frequency resonators, where W is reduced, has much lower k_t^2!

LEM Extraction from Measured Frequency Response

- Resonator frequency response can be measured using vector network analyzer (VNA) → Electrical terminations affect frequency response
- The frequency response provides resonance frequency (***f_0***), quality factor (***Q***) and insertion loss (***IL***)

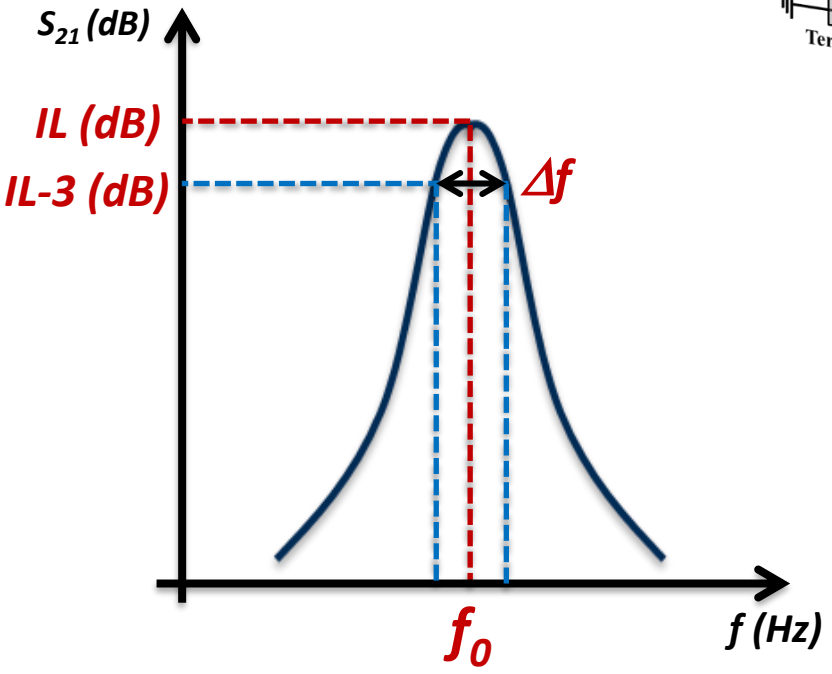

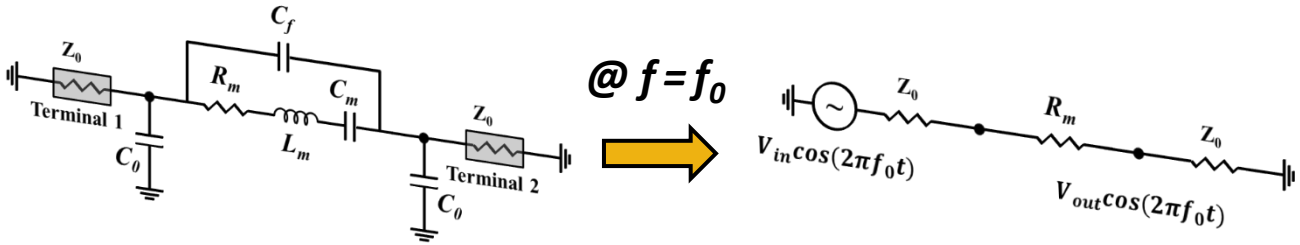

$$IL \approx 20 \cdot log(V_{term}/V_{overall}) = 20 \cdot log(\frac{2Z_0}{2Z_0 + R_m})$$

$$R_m = 2Z_0(10^{\left|\frac{IL}{20}\right|} \cdot -1)$$

$$Q_{loaded} = \frac{f_0}{\Delta f} = \frac{2\pi f_0 L_m}{R_m + 2Z_0};$$

$$Q_{mechanical} = Q_{loaded} \cdot \frac{R_m + 2Z_0}{R_m}$$

$$f_0 = \frac{1}{2\pi\sqrt{L_m C_m}}$$

Example: Extract LEM from Measured Response of Si WE Resonator with Capacitive and Piezoelectric Transducers

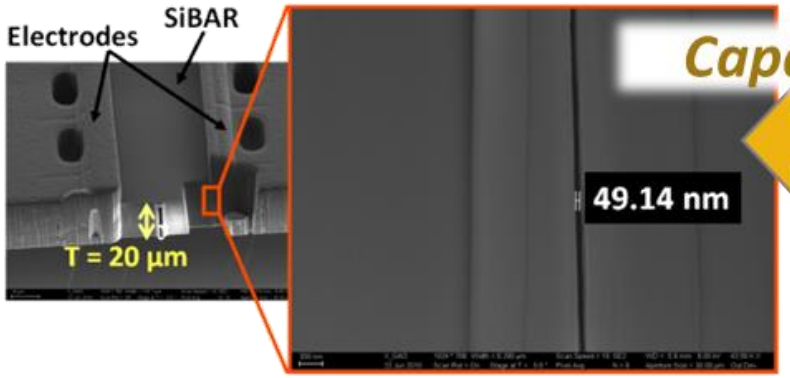

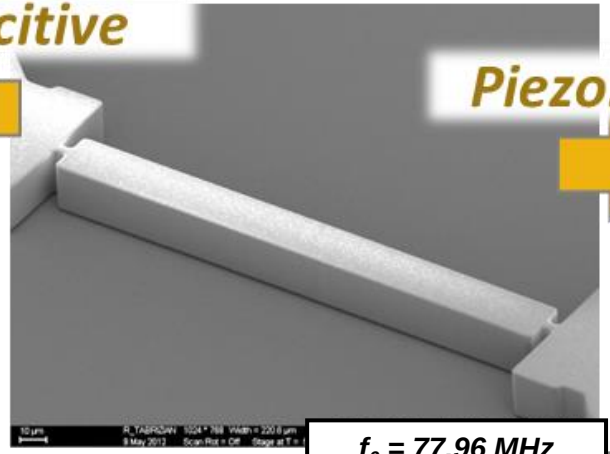

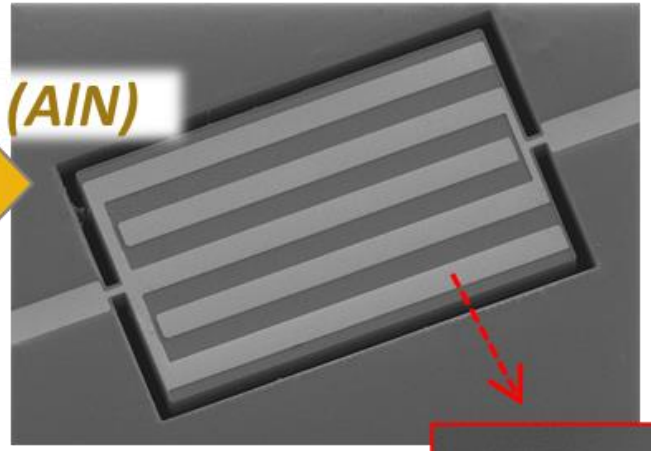

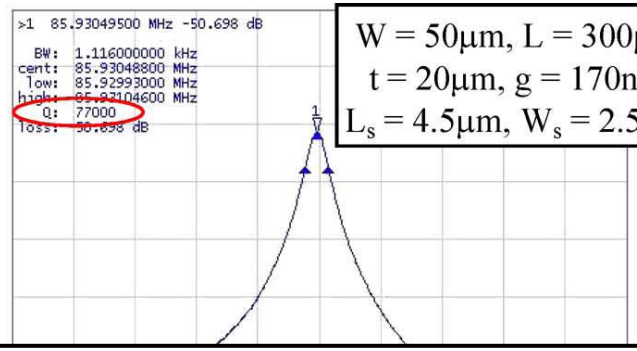

W = 50µm, L = 300µm
t = 20µm, g = 170nm
L_s = 4.5µm, W_s = 2.5µm

$$R_m = 10^{\frac{50.7}{20}} \cdot 100 - 100 = 34177\Omega$$
$$L_m = 77{,}000 \cdot (34177 + 100)/(2\pi . f_0) = 4.89\ H$$
$$C_m = (2\pi . f_0)^{-2}/L_m = 0.0007\ fF$$
$$C_0 = \varepsilon_0 \cdot 100\mu m \cdot 20\mu m/(150nm) = 118\ fF$$

f_0 = 77.96 MHz
Q = 6653
IL = 13.86 dB

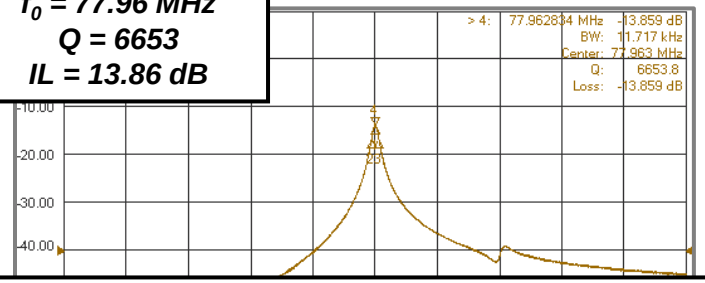

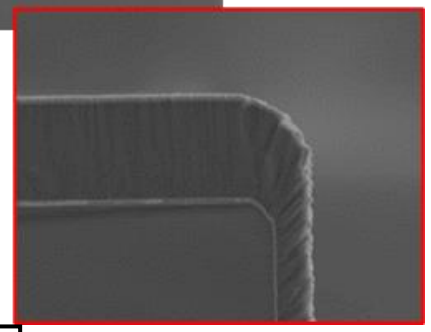

$$R_m = 10^{\frac{13.86}{20}} \cdot 100 - 100 = 361\Omega$$
$$L_m = 6653 \cdot (361 + 100)/(2\pi . f_0) = 6.26\ mH$$
$$C_m = (2\pi . f_0)^{-2}/L_m = 0.67\ fF$$
$$C_0 = 8.5 \cdot \varepsilon_0 \cdot 100\mu m \cdot 50\mu m/(500nm) = 752 fF$$

For V_P= 7V, gap=150 nm vs. 0.5µm AlN:

$$\frac{C_{m,piezo}}{C_{m,cap}} \approx \frac{\eta_{piezo}{}^2}{\eta_{cap}{}^2} \Rightarrow \frac{\eta_{piezo}}{\eta_{cap}} \approx 31$$